LIGHTS

Component Index

Backup Lamp-Left
Backup Lamp-Right
Body Control Module (BCM)
Center High Mount Stoplamp (CHMSL)
Driver Door Module (DDM)
Front Passenger Door Module (FPDM)
Fuse Block-Rear
Fuse Block-Underhood
Headlamp Switch
Instrument Panel Cluster (IPC)
License Lamp-Left
License Lamp-Right
Marker Lamp-LF
Marker Lamp-RF
Outside Rearview Mirror-Driver
Outside Rearview Mirror-Passenger
Park/Neutral Position (PNP) Switch
Park/Turn Signal Lamp-LF
Park/Turn Signal Lamp-RF
Powertrain Control Module (PCM) (4.2L)
Powertrain Control Module (PCM) (5.3L)
SP201
Stop Lamp Switch
Tail Lamp Assembly-Left
Tail Lamp Assembly-Right
Trailer Brake Wiring
Turn Signal/Hazard Flasher Module
Turn Signal/Multifunction Switch

Preliminary

PARK, TURN/HAZARD, MARKER AND LICENSE LIGHTS

Circuit Schematic

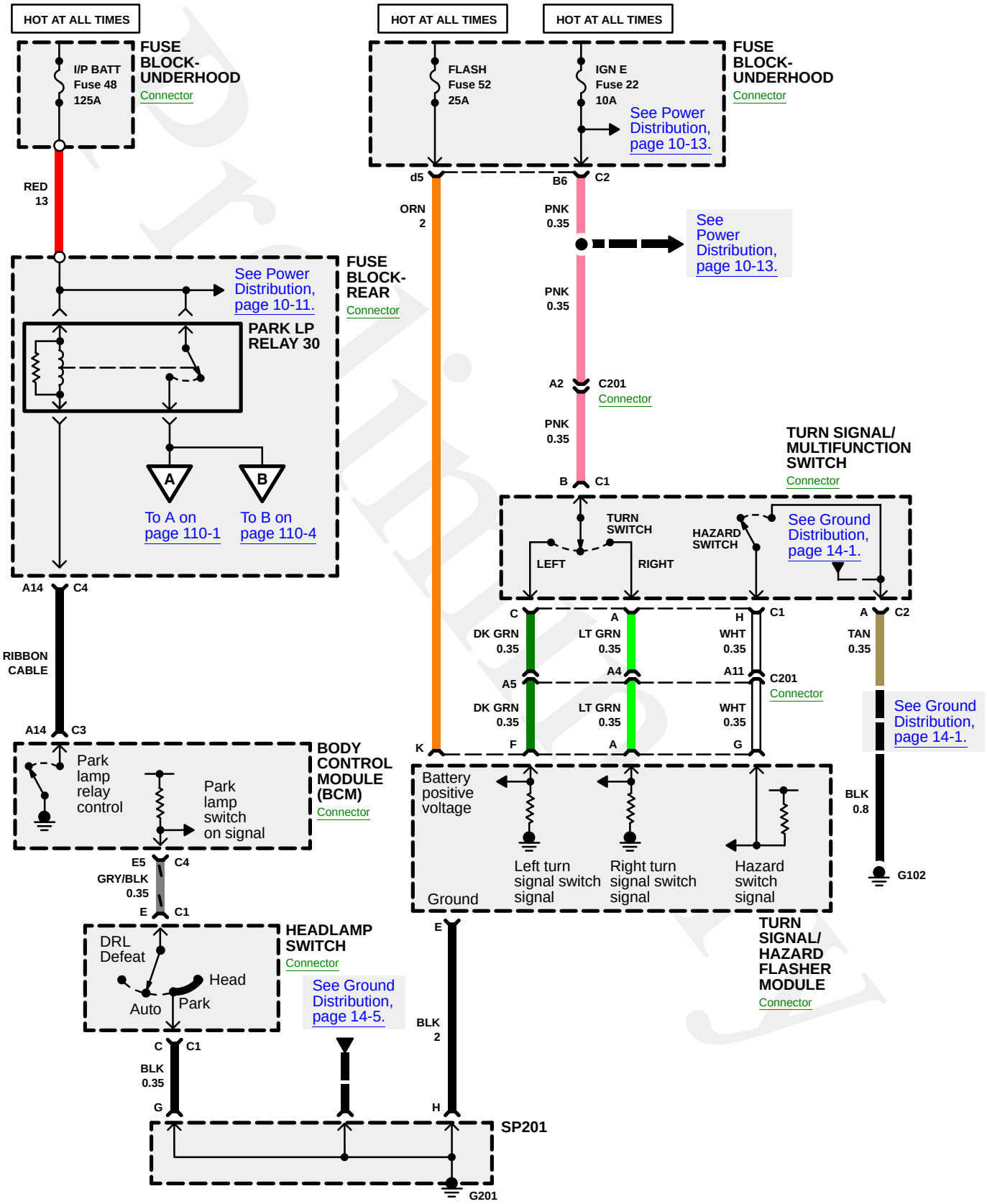

PARK, TURN/HAZARD, MARKER AND LICENSE LIGHTS

Circuit Schematic

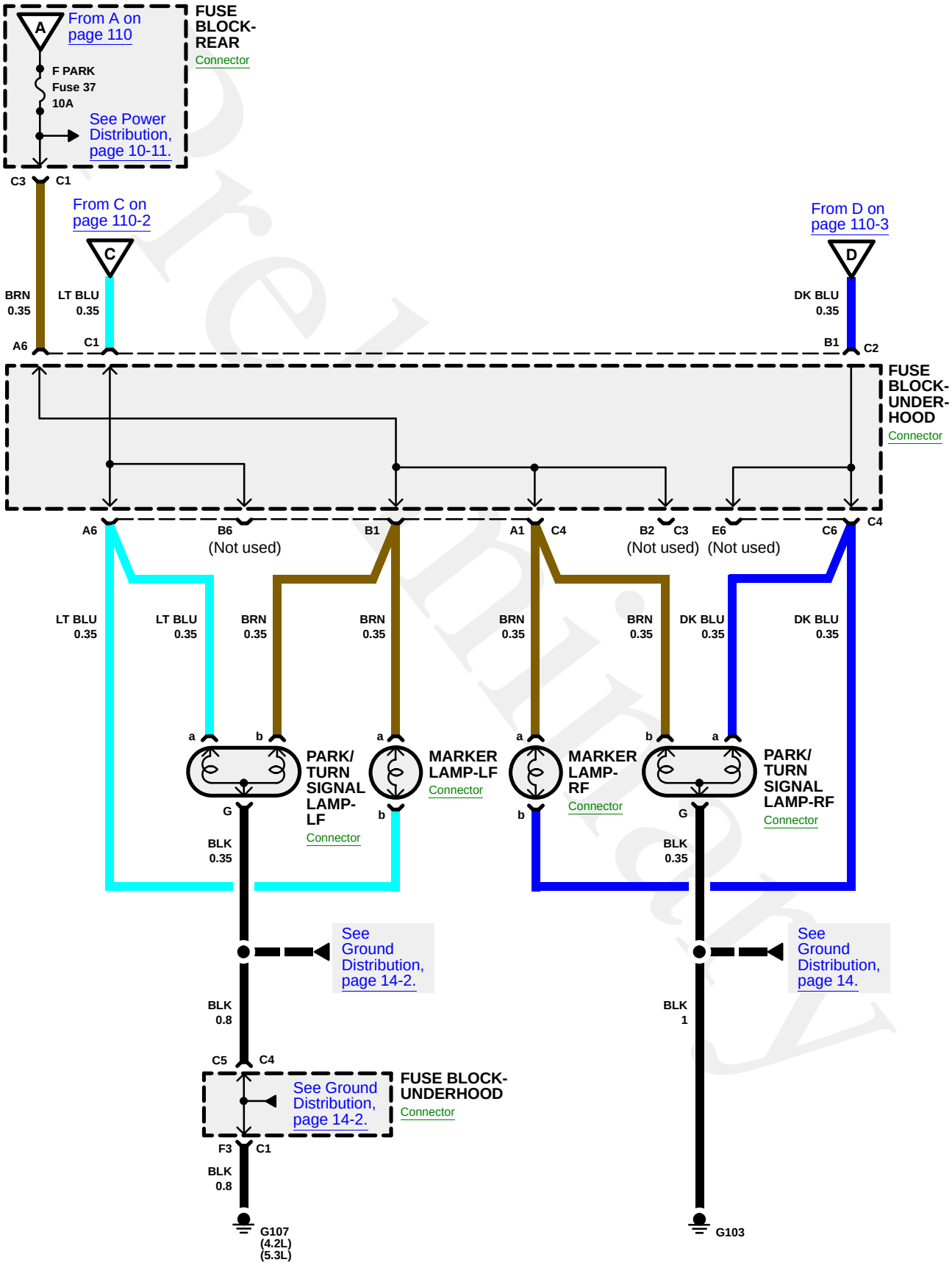

PARK, TURN/HAZARD, MARKER AND LICENSE LIGHTS

Circuit Schematic

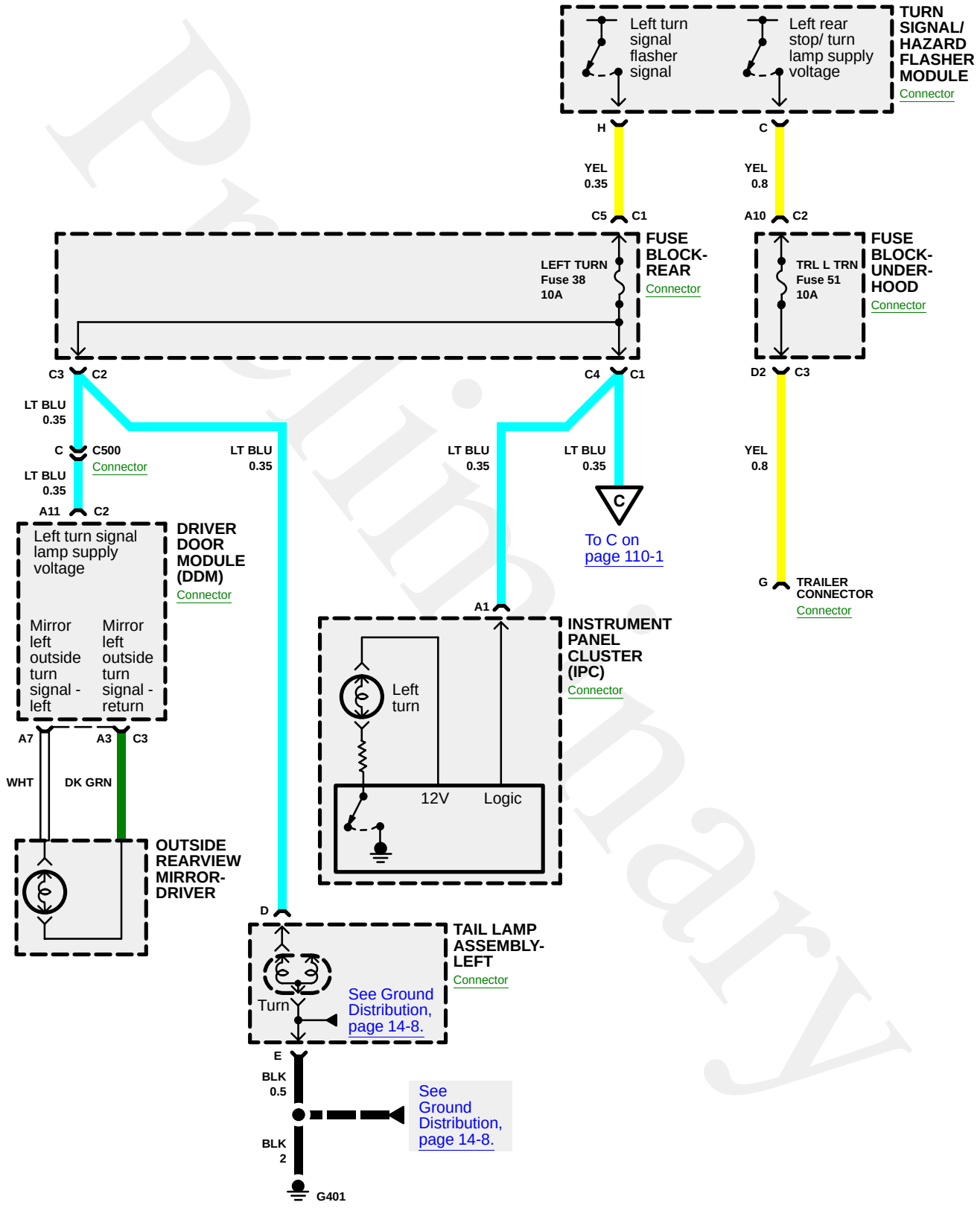

Preliminary

PARK, TURN/HAZARD, MARKER AND LICENSE LIGHTS

Circuit Schematic

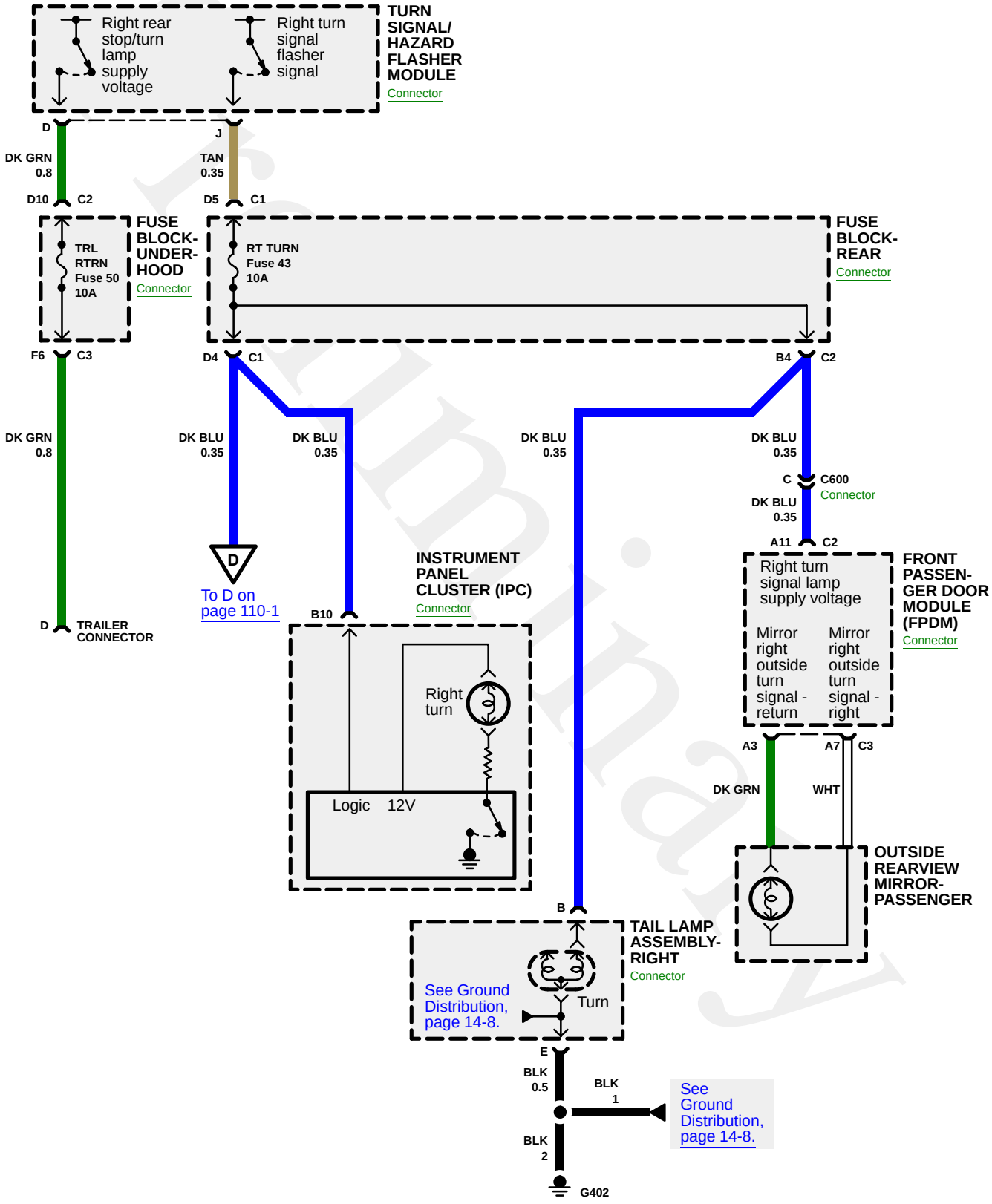

PARK, TURN/HAZARD, MARKER AND LICENSE LIGHTS

Circuit Schematic

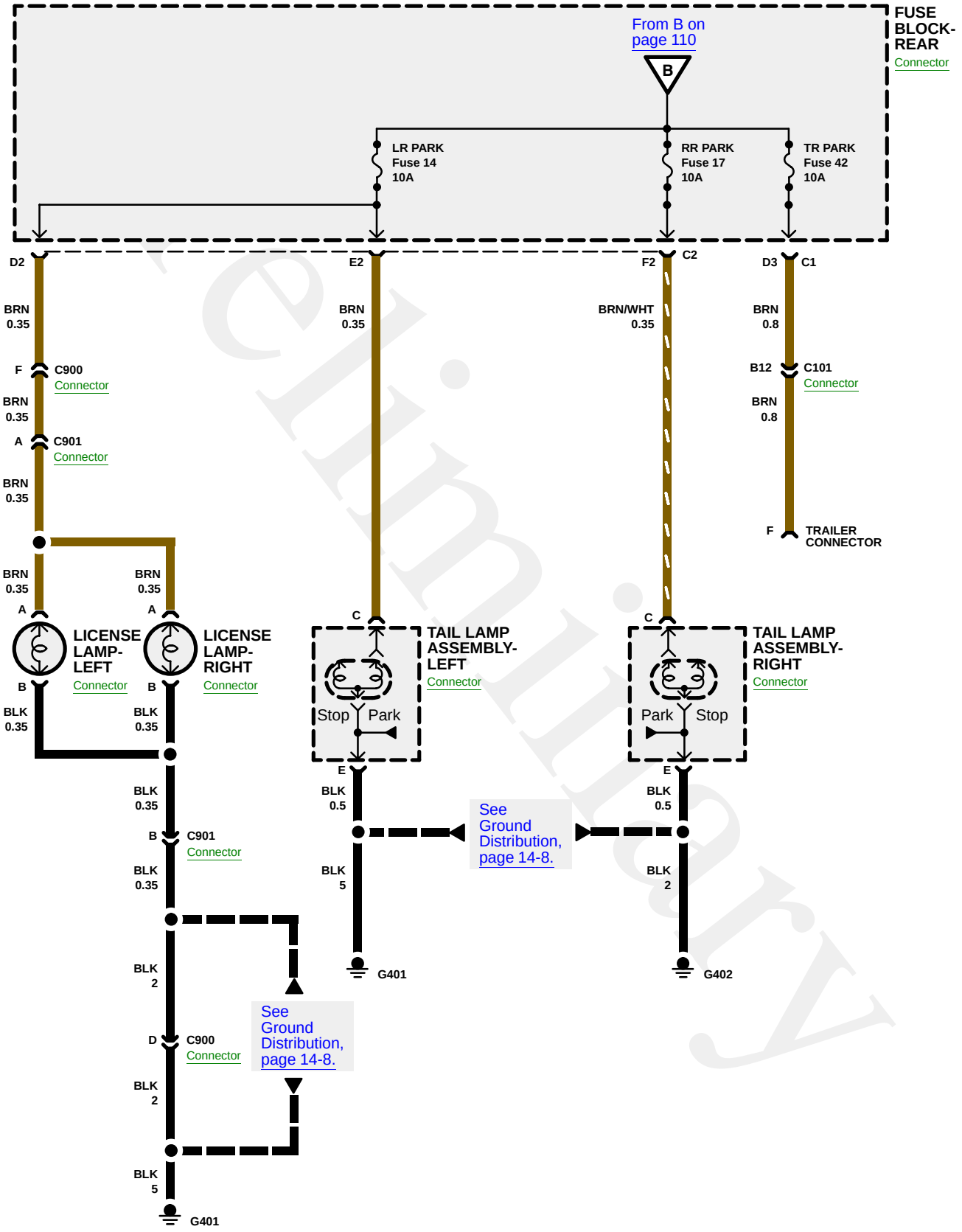

Preliminary

BRAKE LIGHTS

Circuit Schematic

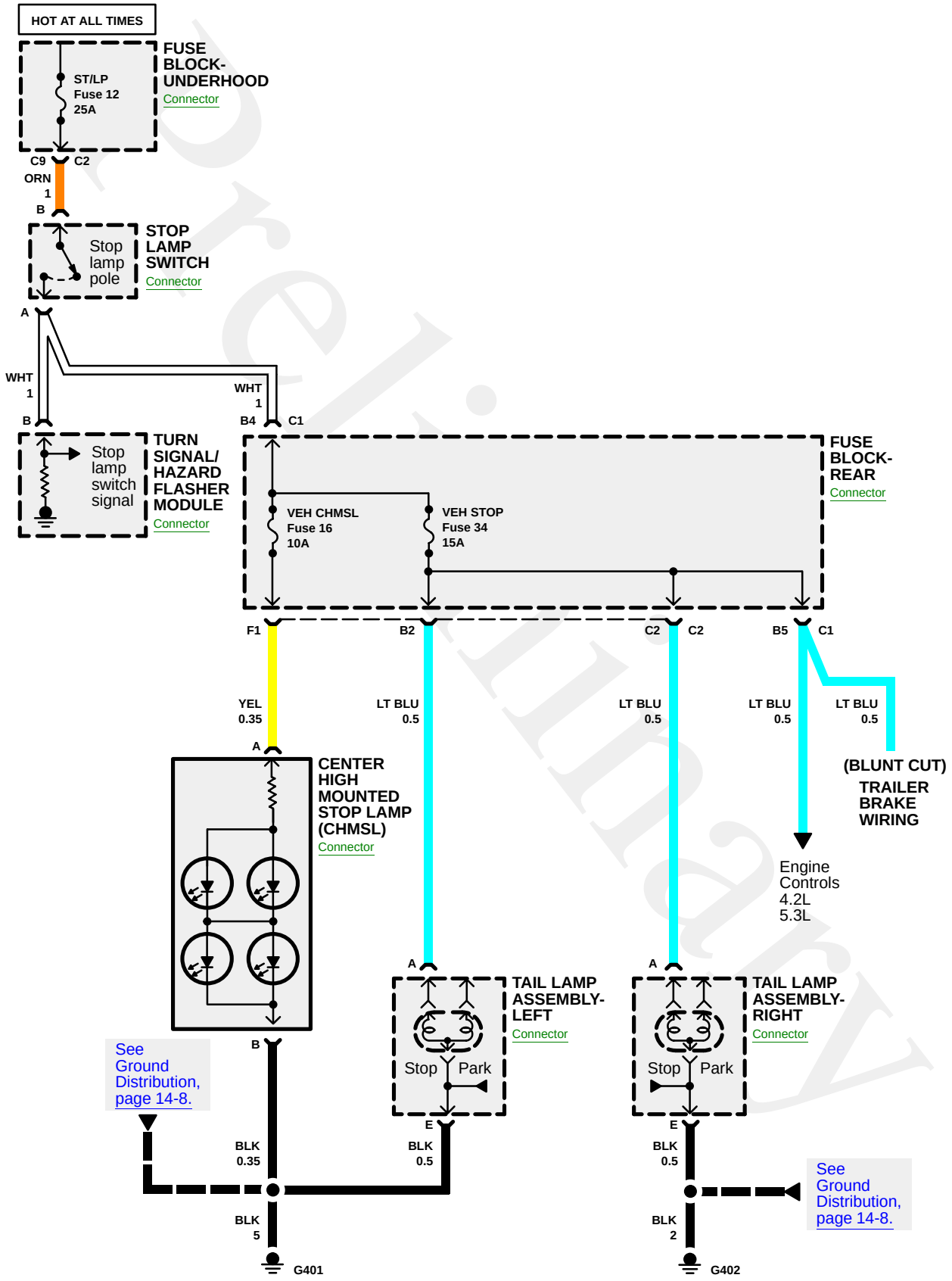

Preliminary

BACK-UP LIGHTS

Circuit Schematic

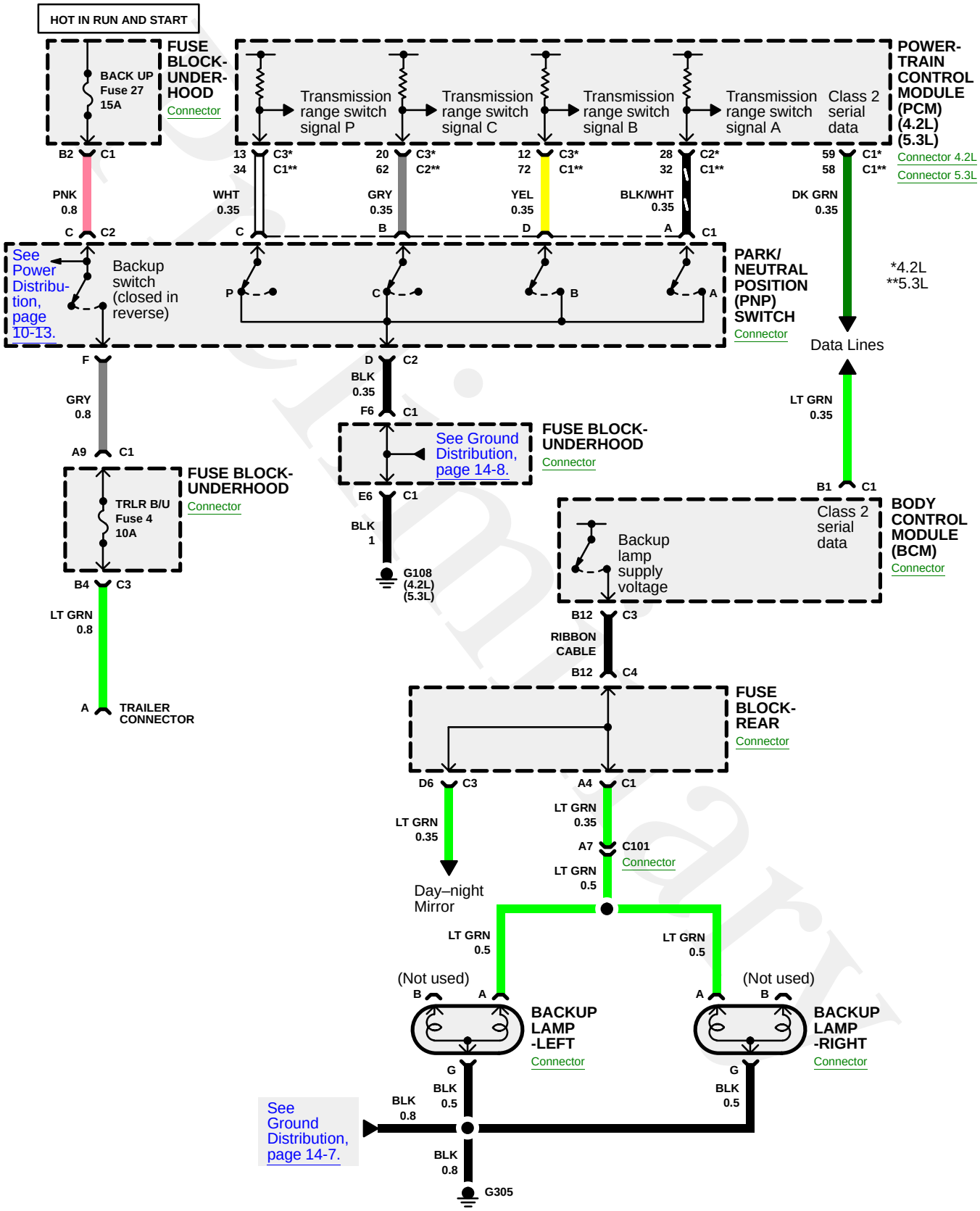

PARK, TURN/HAZARD, MARKER, LICENSE, BACK-UP AND BRAKE LIGHTS

Circuit Operation

Park, Tail, Marker, License, and Clearance Lamps

The park, tail, marker, license, and clearance (Y92 only) lamps are turned on when the headlamp switch is placed in the PARK or ON position or anytime the headlights are requested. The I/P BATT fuse in the engine wiring harness junction block supplies battery positive voltage to both the park lamp relay switch contacts and the park lamp coil circuit. The body control module (BCM) provides a ground or control circuit to the park lamp relay coil circuit. When the park lamps are turned on, the BCM energizes the park lamp relay. Current flow is from the park lamp relay to the individual park lamp circuit fuses and to their respective park, tail, marker, and license lamps. The front park and marker lamps are grounded at G107 and G103. The tail lamps are grounded at G401 and G402. The license lamps are grounded at G401. When equipped with the Y92 roof rack option, the clearance lamps are grounded at G302. If the driver places the headlight switch in the ON position after the ignition switch has been turned OFF, the park, tail, marker, license, and clearance lamps will remain on until turned off or the battery runs dead.

The T PARK fuse in the rear fuse-relay block supplies battery positive voltage to a separate park lamp circuit connected to the trailer wiring harness.

Turn Signal Lamps

The smart flasher (GMSF) is an automotive flasher designed to accept turn, hazard, and brake inputs. The GMSF will provide corresponding outputs to the exterior lamps and instrument panel turn signal indicator lamps. This lighting system has dedicated lamps for the turn/hazard functions and dedicated lamps for the brake function. The system incorporates the use of flash rates for diagnostics. The flash rate is a calculation of the number of flashes that occur within a 60 second period. This system uses a percentage of on-time to off-time called duty cycle. For the bulb outage condition, the indicator of the vehicle side on which the outage occurs shall assume bulb outage flash rate mode. The opposite side indicator will assume the normal flash rate mode for an input from the non bulb outage side of the vehicle. Hazard warning lamp outage will maintain a normal flash rate as long as 2 or more exterior signaling lamps are functional. During all modes of operation, the IPC will receive the same flash rates and duty cycles that the exterior lamps receive. The IPC will then control the indicators in the cluster. The vehicle operator will be provided with an audible and visual indication of the flasher operation. Below is a table with flash rates and duty cycles:

Operating Condition	Flash Rate	Duty Cycle
Normal	75 to 105 flashes per minute	45% to 55%
Turn Signal Lamp Outage	2 or 3 times faster than normal flash rate	35% to 55%

The IGN E fuse in the engine wiring harness junction block supplies Ignition positive voltage to the turn signal switch assembly. With the ignition switch in the RUN or START position, ignition positive voltage is connected through the turn signal and hazard switch assembly to the GMSF which is powered by the FLASHER fuse also in the engine wiring harness junction block and is grounded at G201. When the turn signal switch is placed in either the left or right position, the circuit is complete from the GMSF to the turn signal lamps and to ground. The GMSF then sends an on-off voltage signal to either the left or right turn signals and their instrument panel cluster (IPC) indicator. When the hazard switch is pressed, all turn signal lamps will flash including both IPC turn indicators. The front turn signals are grounded at G103 and G107. The rear turn signals are grounded at G401 and G402.

The IPC illuminates the TURN SIGNAL ON indicator in the driver information center when the IPC determines that the turn signal is active for more than 1.2 km (0.75 mile). The IPC also sends a class 2 message to the radio in order to activate the audible warning.

On vehicles equipped with the outside rear view mirror turn signal lamps, the turn signal voltage is also sent to the respective front door module. The door modules then distribute power and ground to the activated lamp.

For trailer wiring, separate turn signal circuits are connected through the GMSF to the trailer wiring harness.

PARK, TURN/HAZARD, MARKER, LICENSE, BACK-UP AND BRAKE LIGHTS

Circuit Operation

Cornering Lamps

The turn signal switch sends battery positive voltage to the cornering lamps which will constantly remain illuminated until turn signal operation is cancelled. The cornering lamps are grounded at G103 and G107.

Stop Lamps

The STOP fuse in the engine wiring harness junction block supplies battery positive voltage to the normally open stop lamp switch. When the driver presses the brake pedal, the switch contacts close and battery positive voltage is supplied to both the VEHICLE STOP fuse and the VEHICLE CHMSL fuse. The current flow is now to the stop lamps which are grounded at G401 and G402. The center high mounted stop lamp (CHMSL) is grounded at G401.

For trailer wiring, a separate stop lamp circuit is connected through the GMSF to the trailer wiring harness.

Backup Lamps

On a vehicle equipped with an automatic transmission, the backup lamps request signal is sent from the powertrain control module (PCM) to the body control module (BCM) via class 2. This signal is based on the state of the park neutral position (PNP) switch. On a manual transmission equipped vehicle, the B/U fuse in the engine wiring harness junction block supplies battery positive voltage to the normally open backup lamp switch. When the driver places the gear selector lever is in the REVERSE position, the backup lamp switch closes and the current flow is from the backup lamp switch to the BCM signaling for backup lamp illumination.

The BCM directly supplies voltage for backup lamp operation on both automatic and manual transmission vehicles. The backup lamps are grounded at G401 and G402 (G305 on vehicles that have the backup lamps located in the lower bumper facia).

For trailer wiring, a separate backup lamp circuit is connected through the TRLR B/U fuse to the trailer wiring harness.

Preliminary

PARK, TURN/HAZARD, MARKER, LICENSE, BACK-UP AND BRAKE LIGHTS

Component Location Index

(Refer to Section 201 for photographs.)

Component		Photo No.
Body Control Module (BCM)	On Rear Fuse Block, under left rear seat	53
Center High Mount Stoplamp (CHMSL)	At the top center of liftgate exterior	107
Driver Door Module (DDM)	On lower part of the driver door switch panel	95
Front Passenger Door Module (FPDM)	On lower part of passenger door switch panel	96
Fuse Block-Rear	Under the left rear seat	52
Fuse Block-Underhood	Left side of engine compartment	3
Headlamp Switch	On the left side of the IP	61
Instrument Panel Cluster (IPC)	On the left side of the IP, above the steering column	59
Park/Neutral Position (PNP) Switch	Left side of transmission	40
Powertrain Control Module (PCM) (4.2L)	Left front of engine	5
Powertrain Control Module (PCM) (5.3L)	Left front of engine compartment	25
SP201	Near right front of lower console	80
Stop Lamp Switch	On brake pedal support	64
Tail Lamp Assembly-Left	At the left rear of the vehicle	112
Tail Lamp Assembly-Right	At the right rear of the vehicle	112
Turn Signal/Hazard Flasher Module	Below the left side of I/P	57
Turn Signal/Multifunction Switch	On the stalk, on the left side of the steering column	71
Connector		
C101 (38-BLK)	Left side of engine compartment	3
C201 (17-BLK), (18-BLK), and (13-GRY)	At base of steering column	120
C500 (12-BLK)	Midpoint of leading edge of left front door	93
C600 (12-BLK)	Midpoint of leading edge of right front door	93
C900 (6-BLK)	Top of the liftgate	107
C901 (2-GRY)	Inside the liftgate	113
Trailer Connector	Below the center of the rear bumper	116
Ground		
G102	Left side of engine compartment	4
G103	Right rear of engine compartment	15
G107 (4.2L)	Lower left side of engine	37
G107 (5.3L)	Lower left side of engine	38
G108 (4.2L)	Lower left side of engine	37
G108 (5.3L)	Lower left side of engine	38
G201	Near right front of lower consol	80
G305	Outside of left frame rail, near fuel tank	36
G401	On lower left D-pillar	109
G402	On lower right D-pillar	111

Preliminary